Reservedele
Greb MDS

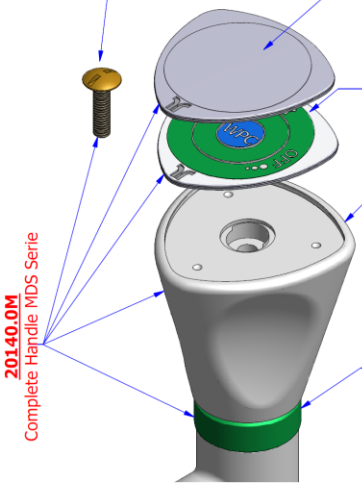

20140M.E - Screw for handle

20140M.COP
MDS handle's transparent/clear cover

20140M.LAB
Just MDS handle's label w/chemical index

20140M.A7032 - Sole MDS Ral7032 handle (PP tap)
20140M.AG - Sole MDS Ral7035 handle (Burning gas)
20140M.AJ - Sole MDS Ral 7035 handle (Joystick tap)
20140M.AW - Sole MDS Ral 7035 handle (Water/Technical gas tap)
20140M.ADEMI - Sole MDS Ral 7035 handle (Demi tap)

20140M.ANLG - Ring under MDS (Burning gas) handle
20140M.ANLJ - Ring under MDS (Joystick) handle
20140M.ANLW -Ring under MDS (Water and Technical Gas) handle

20140.0M7032 - Complete (Ral7032) handle - MDS series

20140.0MG - Complete (Burning gas) handle - MDS series

20140.0MJ - Complete (Joystick tap) handle - MDS series

20140.0MW - Complete handle Ral 7035 - MDS series (Water/Technical gas tap)

20140.0MDEMI - Complete (Demi tap) handle - MDS series